SURFACE PROTECTION OBERFLAECHENSCHUTZ PROTECTION DE SURFACE PROTEZIONE SUPERFICIALE	
I	JED-259
II	JED-256-1
III	JED-471 SCHWARZ/BLACK
IV	KUNSTOFF/PLASTIC
V	JED-260

WABCO AIR PROCESSING UNIT	WABCO AIR DRYER	SILENCER	BACK FLOW LIMITING VALVE dP = (bar)	COMBINED UNLOADER CUT OUT PRESSURE Pe = (bar)	COMBINED UNLOADER OPERATING RANGE dP = (bar)	SAFETY PRESSURE OF THE PURGE VALVE AT $\dot{V}_N$ = 100 dm^3/min	MASS (kg)
932 500 060 0	432 415 060 0	----------	0.6 x dp±0.05	8.5 ±0.2	$0.7\ ^{+0.5}_{0}$	≤14.5	6.16
932 500 061 0	432 415 056 0	432 407 015 0	0.6 x dp±0.05	8.5 ±0.2	$0.7\ ^{+0.5}_{0}$	≤14.5	6.26
932 500 062 0	432 415 057 0	432 407 015 0	0.5 x dp±0.05	10 ±0.2	$0.9\ ^{+0.8}_{0}$	≤16	6.26

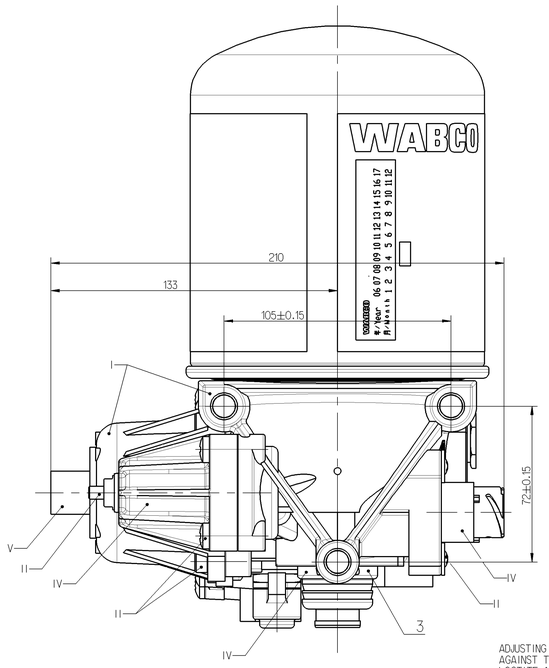

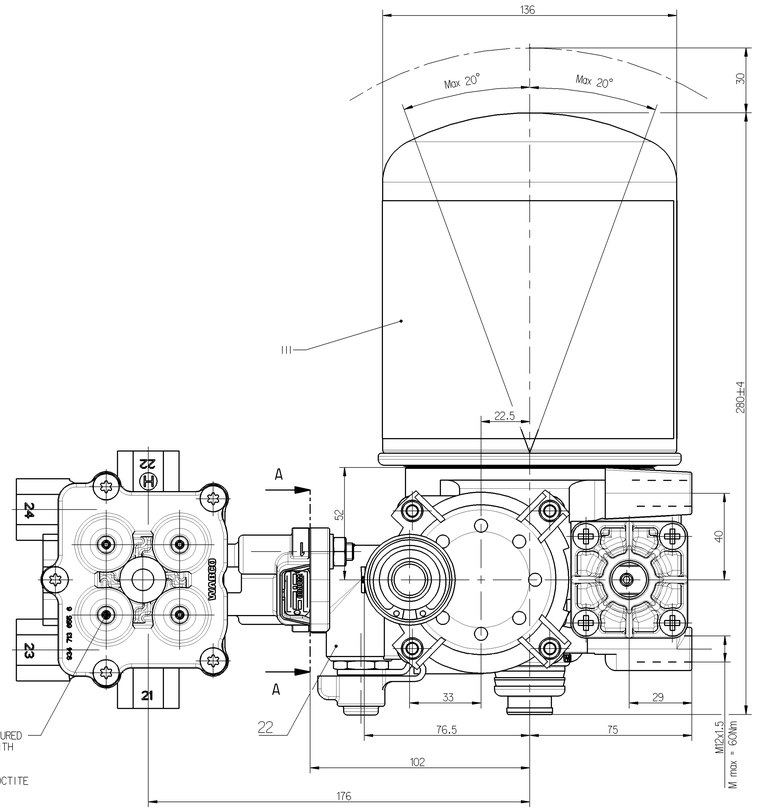

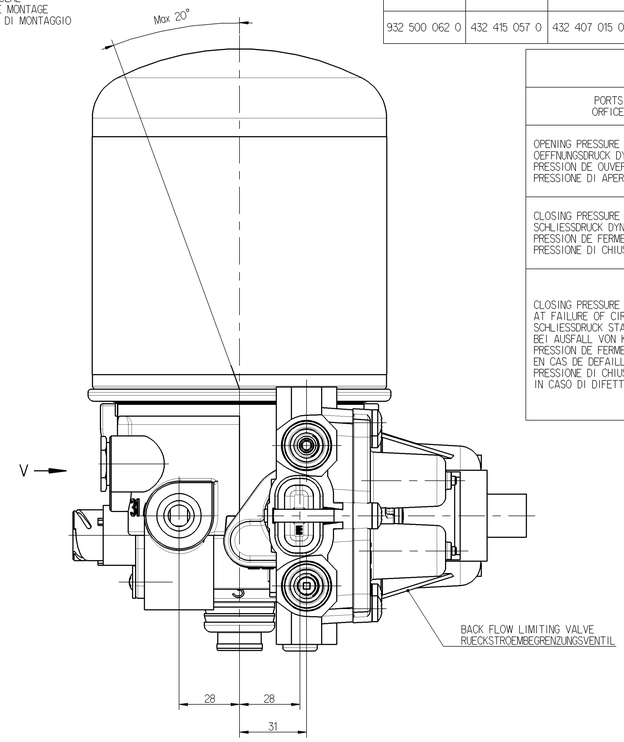

WABCO QUAD-VALVE 934 714 161 0					
PORTS ORFICES / ANSHLUESSE ATTACCHI		21	22	23	24
OPENING PRESSURE DYNAMIC OEFFNUNGSDRUCK DYNAMISCH PRESSION DE OUVERTURE DYNAM PRESSIONE DI APERTURA DINAM	BAR	$6.5\ ^{0}_{-0.3}$	$6.5\ ^{0}_{-0.3}$	$7.5\ ^{0}_{-0.3}$	$6.5\ ^{0}_{-0.3}$
CLOSING PRESSURE DYNAMIC SCHLIESSDRUCK DYNAMISCH PRESSION DE FERMETURE DYNAM PRESSIONE DI CHIUSURA DINAM	BAR	≥ 6.0			
CLOSING PRESSURE STATIC AT FAILURE OF CIRCUIT .... SCHLIESSDRUCK STATISCH BEI AUSFALL VON KREIS .... PRESSION DE FERMETURE STATIQUE EN CAS DE DEFAILLANCE DU CIRCUIT .... PRESSIONE DI CHIUSURA STATICA IN CASO DI DIFETTO DEL CIRCUITO	BAR	0	≥ 5.0	≥ 5.0	≥ 5.0
		≥ 5.0	0	≥ 5.0	≥ 5.0
		≥ 5.0	≥ 5.0	0	≥ 5.0
		≥ 5.0	≥ 5.0	≥ 5.0	0

AIR DRYER ©

PORT ANSCHLUSS ORIFICE ORIFIZIO	FUNCTION FUNCTION FONCTION FUNZIONE	THREAD GEWINDE FILETAGE FILETTAURA
1	FROM THE COMPRESSOR VOM KOMPRESSOR PROVENANT DU COMPRESSEUR PROVENIENTE DEL COMPRESSORE	M22x1.5 JED-152
31 (12)	EXTERNAL FILLING - CLOSED FREMDBEFUELLUNG - VERSCHLOSSEN ALIMENTATION DE L'EXTERIEUR - FERME ALIMENTAZIONE SEPARATA - CHIUSO	M16x1.5 JED-152
21	TO THE RESERVOIRS ZU DEN LUFTBEHAEL TERN AUX RESERVOIR AL SERBATOII PER	
22	TIRE INFLATION DEVICE REIFENFUELLANSCHLUSS PRISE POUR GONFLAGE PNEU PRESA PER GONFIAGGIO PNEUM	
3	EXHAUST FOR COMPRESSED AIR ENTLUEFTUNG FUER DRUCKLUFT ECHAPPEMENT POUR AIR COMPRIME SCARICO PER AIRIA COMPRESSA	
4	TO THE COMPRESSOR ZUM KOMPRESSOR AU COMPRESSEUR AL COMPRESSORE	M12x1.5 JED-152

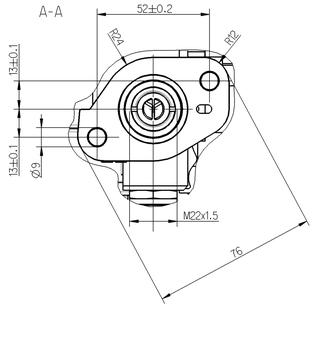

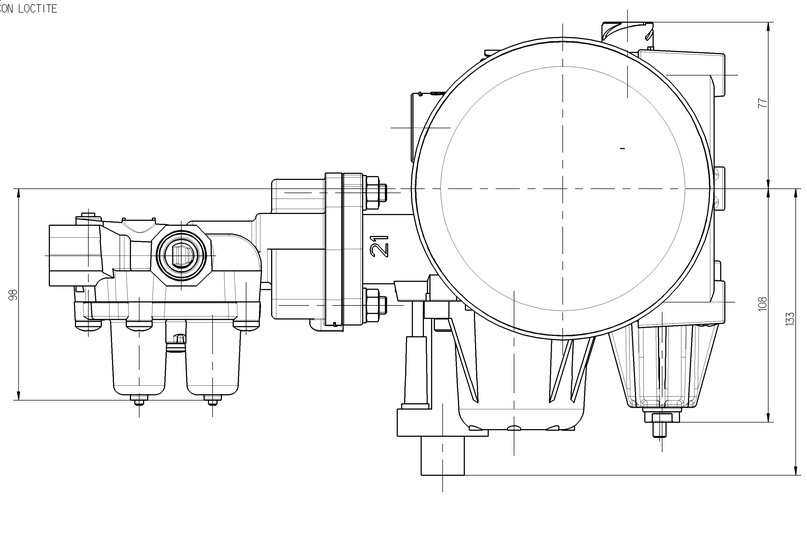

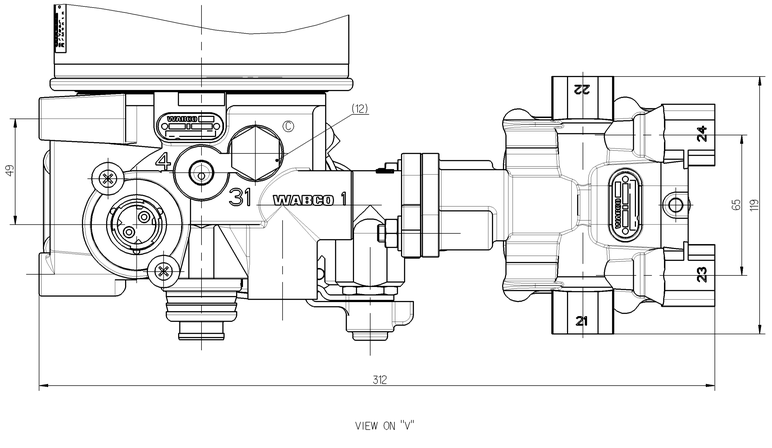

VIEW ON "V"

QUAD VALVE ©

PORT ANSCHLUSS ORIFICE ORIFIZIO	FUNCTION FUNCTION FONCTION FUNZIONE	THREAD GEWINDE FILETAGE FILETTAURA
1	SUPPLY LUFTEINTRITT ALIMENTATION ALIMENTAZIONE	
21	CIRCUIT 1 KREIS 1 CIRCUIT 1 CIRCUITO 1	M22x1.5 JED-388
22	CIRCUIT 2 KREIS 2 CIRCUIT 2 CIRCUITO 2	M22x1.5 JED-388
23	CIRCUIT 3 KREIS 3 CIRCUIT 3 CIRCUITO 3	M22x1.5 JED-388
24	CIRCUIT 4 KREIS 4 CIRCUIT 4 CIRCUITO 4	M22x1.5 JED-388

THERMAL RANGE OF CONTINUOUS APPLICATION:
TERMISCHER DAUERANWENDUNGSBERREICH: -40°C... +65°C
PLAGE DE TEMPERATURE EN UTILISATION CONTINUE:
COMPO DI APPICAZIONE CONTINUA:

RESISTANCE TO HEAT:
WAERMEBESTAENDIGKEIT: +80°C MAX.
RESISTANCE A LA CHALEUR:
RESISTANZA AL CALORE:

MEDIUM: COMPRESSED AIR
MEDIUM: DRUCKLUFT
FLUIDE: AIR COMPRIME
FLUIDO: ARIA COMPRESSA

WORKING PRESSURE:
BETRIEBSDRUCK: Pe MAX.=13 bar
PRESSION DE SERVICE:
PRESSIONE D' ESERCIZIO:

MAX. PREMISSIBLE FREQUENCY
MAX. ZULAESSIGE FREQUENZ 50Hz
MAX. ADMISSIBLE FREQUENZE
MAX. AMMISIBLE FREQUENZA

MAX. PREMISSIBLE ACCELERATION
MAX. ZULAESSIGE BESCHLINIGUNG ±10 xg
ACCELERATION MAX. ADMISSIBLE
ACCLERAZIONE MAX. AMMESA

HEATING
HEIZUNG
CHAUFFAGE
RISCALDAMENTO

HEATING CUT-IN TEMPERATURE:
HEIZUNG EINSCHALT-TEMPERATUR 7±6°C
CHAUFFAGE TEMPERATURE DE FERMETURE:
RISCALDAMENTO TEMPERATURA DI CHIUSURA:

HEATING CUT-OFF TEMPERATURE:
HEIZUNG AUSSCHALT-TEMPERATUR: 29.5 ±3°C
CHAUFFAGE TEMPERATURE DE MISE:
RISCALDEMENTO TEMPERATURA DI APERTURA:

BATTERY VOLTAGE:
BATTERIESPANNUNG: 24 +4.8/-2.4 V DC
TENSION DE BATTERIE:
TENSIONE DI BATTERIA:

POWER WITHOUT CURRENT:
LEISTUNG STROMLOS: 100 W
PUISSANCE SANS COURANT:
POTENZA SENZA CORRENTE:

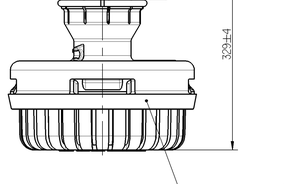

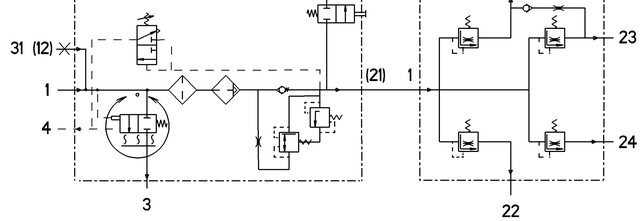

General Specification: JED-334-0							
Further Technical Data:							
Doc. Code:				Sheet:		To	
General Tolerances JED-261							
Class 1)	Range of Nominal Dimensions (in mm)						
		≥ 0.5	≥ 1.0	≥ 50	≥ 180	≥ 400	> 400
Fine		0.5	1.0	1.5	2.0		
Medium	X	1.0	2.0	3.0	4.0		±3°
Coarse		2.0	3.5	5.0	6.5		
Tapped Holes acc. JED-152							
1) Tolerance Class Applied Crossmarked							

Copyright WABCO®

Date	Signature	Drawn	Checked	Expert	Material No.	Date of first issue: 2010-01-29
2011-01-05	Zowiszo	2011-01-19 Czopiewski		CHAMOT	932 500 906 0	Doc.Code: 053 Language: ML Sheet: 1/1

Mass	Scale	Size	CAD System	ECN-No.	Revision	Techn. Reg.	Replacement for
SEE TABLE KG	1:1	A 0	Pro/E	154335	3 x C	5110	

WABCO

AIR PROCESSING UNIT
DRUCKLUFTAUFBEREITUNG
UNITE COMPACTE
UNITA COMPATTA

100mm