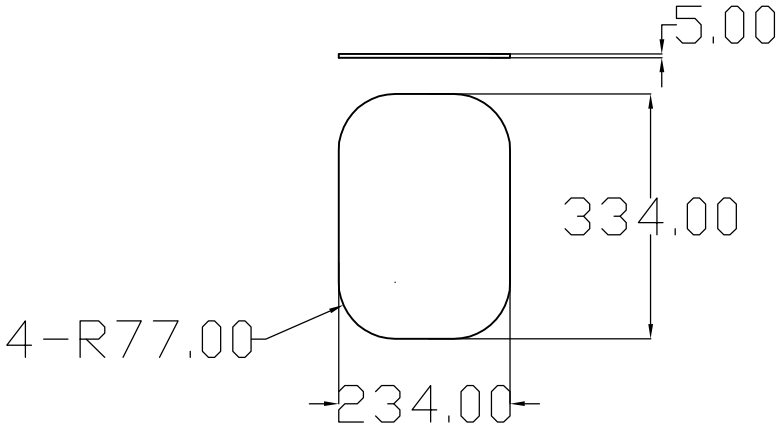

Right door view glass	
RST-KODIAK005	1:1