CAD

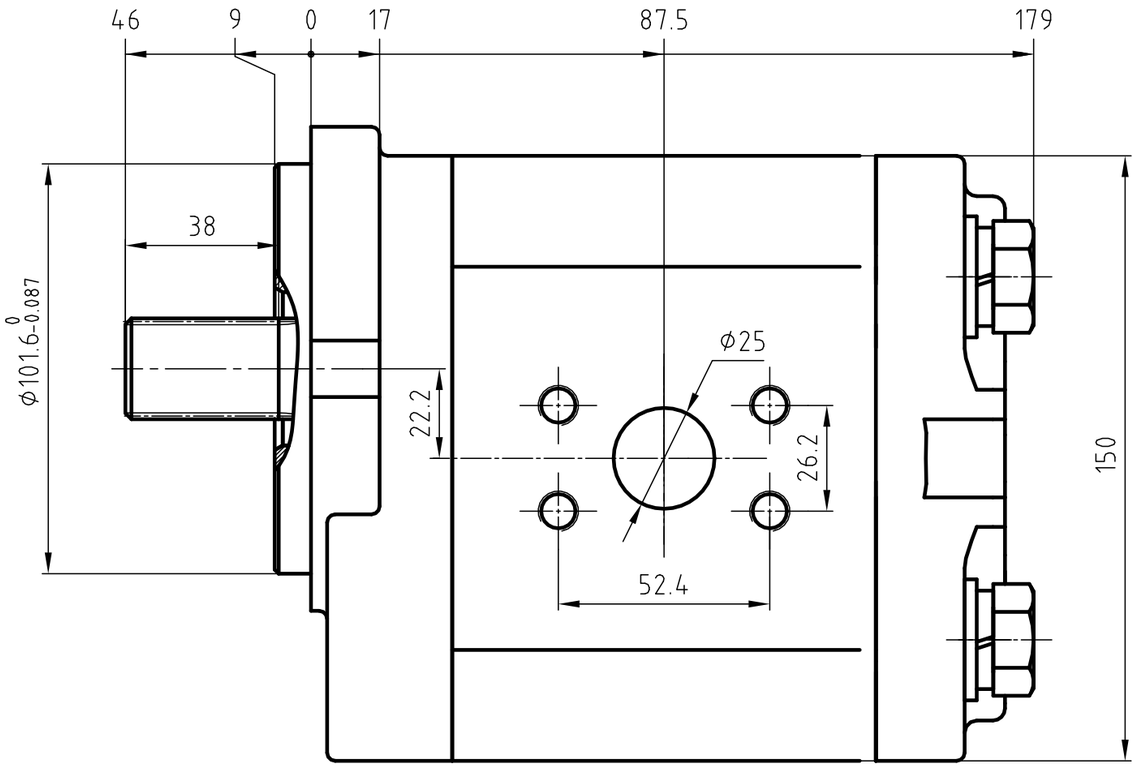

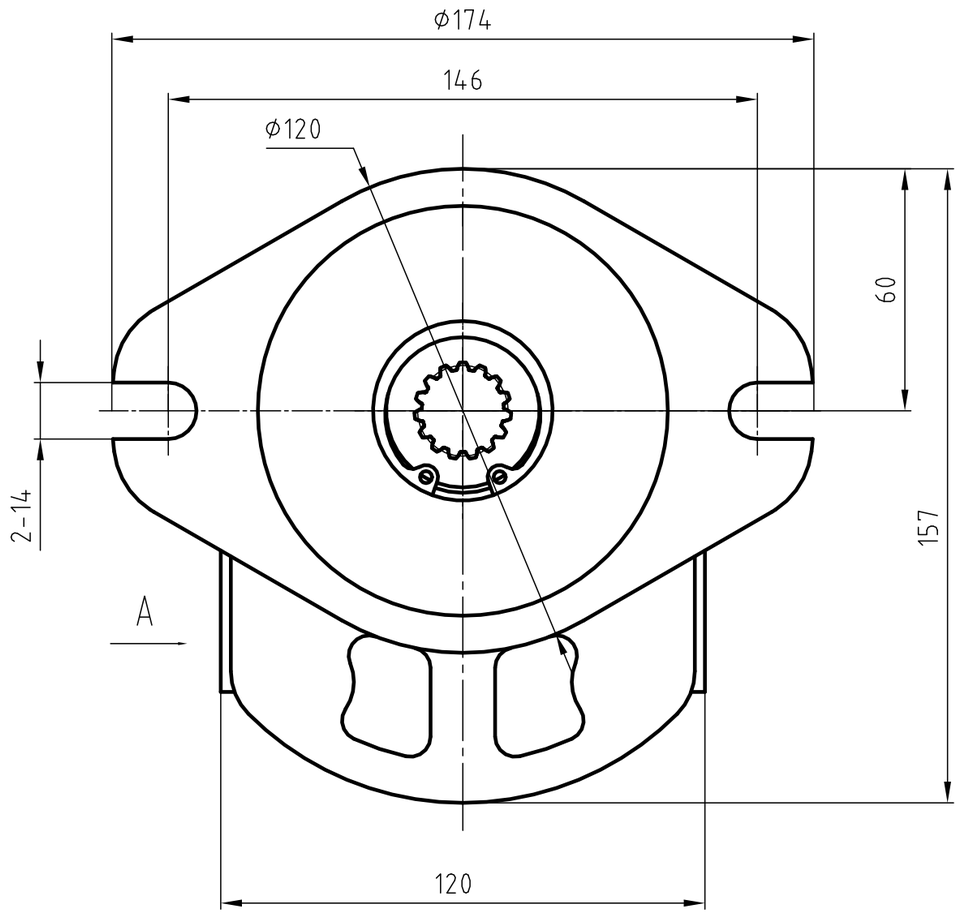

(Filler opening) A( ) deep

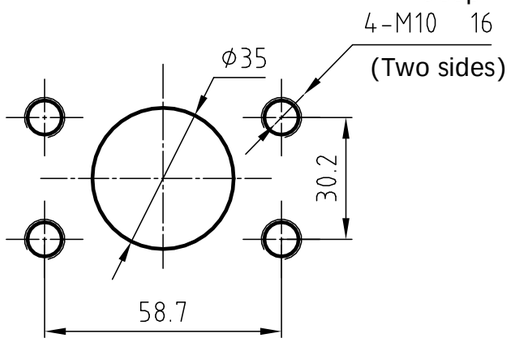

technical parameter

1. Theoretical displacement: 50mL/r,
2. Rated pressure: 20MPa, highest pressure: 25MPa ,
3. Rated speed: 2000r/min, speed range: 600~3000r / min,
4. Diagram orientation: right,
5. Volume efficiency: ηv≥92%

SAE Spline	
Dp	16/32
Z	15
α	30°
d	$\Phi 21.8^{0}_{-0.2}$
D	$\Phi 24.98^{0}_{-0.13}$
Dm	Φ3.048
MdR	$\Phi 28.2^{-0.05}_{-0.15}$
Flat root spline	

CBHB(AFΦ15)-WX